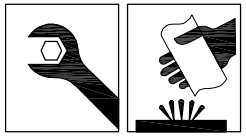

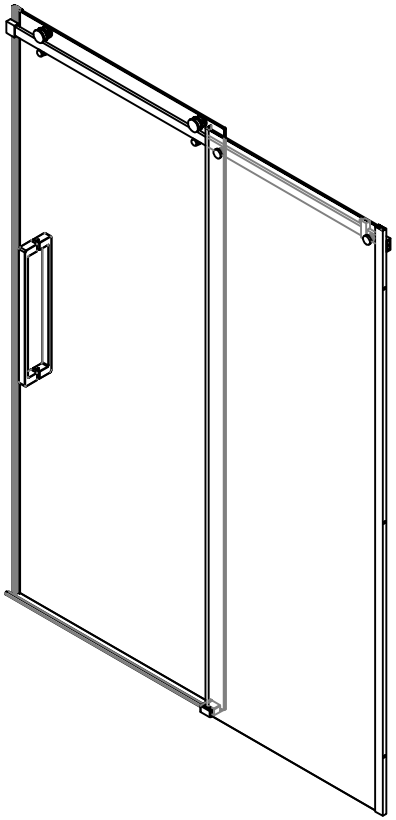

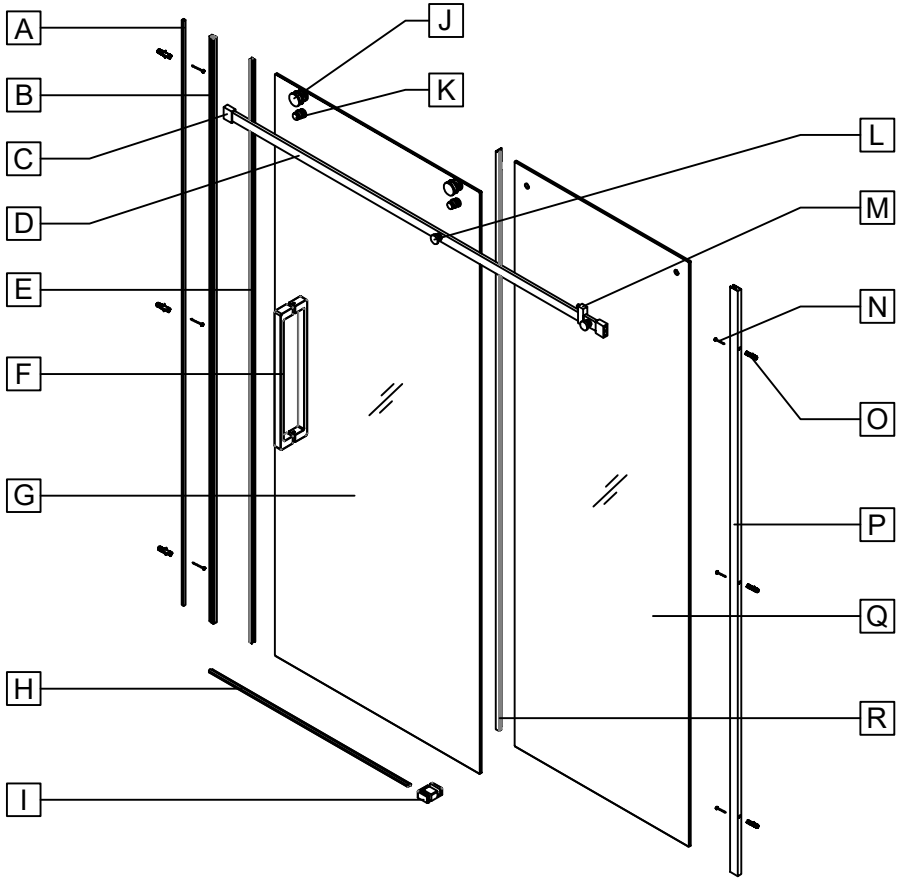

NO.	Description	Quantity	NO.	Description	Quantity
A	Magnetic suction column	1	P	Side column	1
B	Magnetic adhesive strip	1	Q	Screen	1
C	Support rod joint	2	R	Water retaining strip	1
D	Support rod	1			
E	Magnet assembly	1			
F	Handle	1			
G	Movable glass	1			
H	Door sill aluminum	1			
I	Door sill aluminum pressing block	1			
J	Upper roller	2			
K	Lower roller	2			
L	Glass fastener	2			
M	Positioning block	1			
N	ST4*30 Screw	6			
O	Colloidal particles	6			

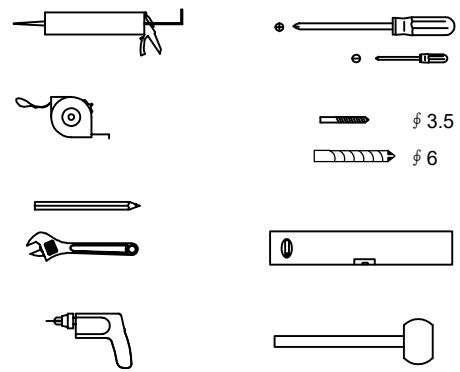

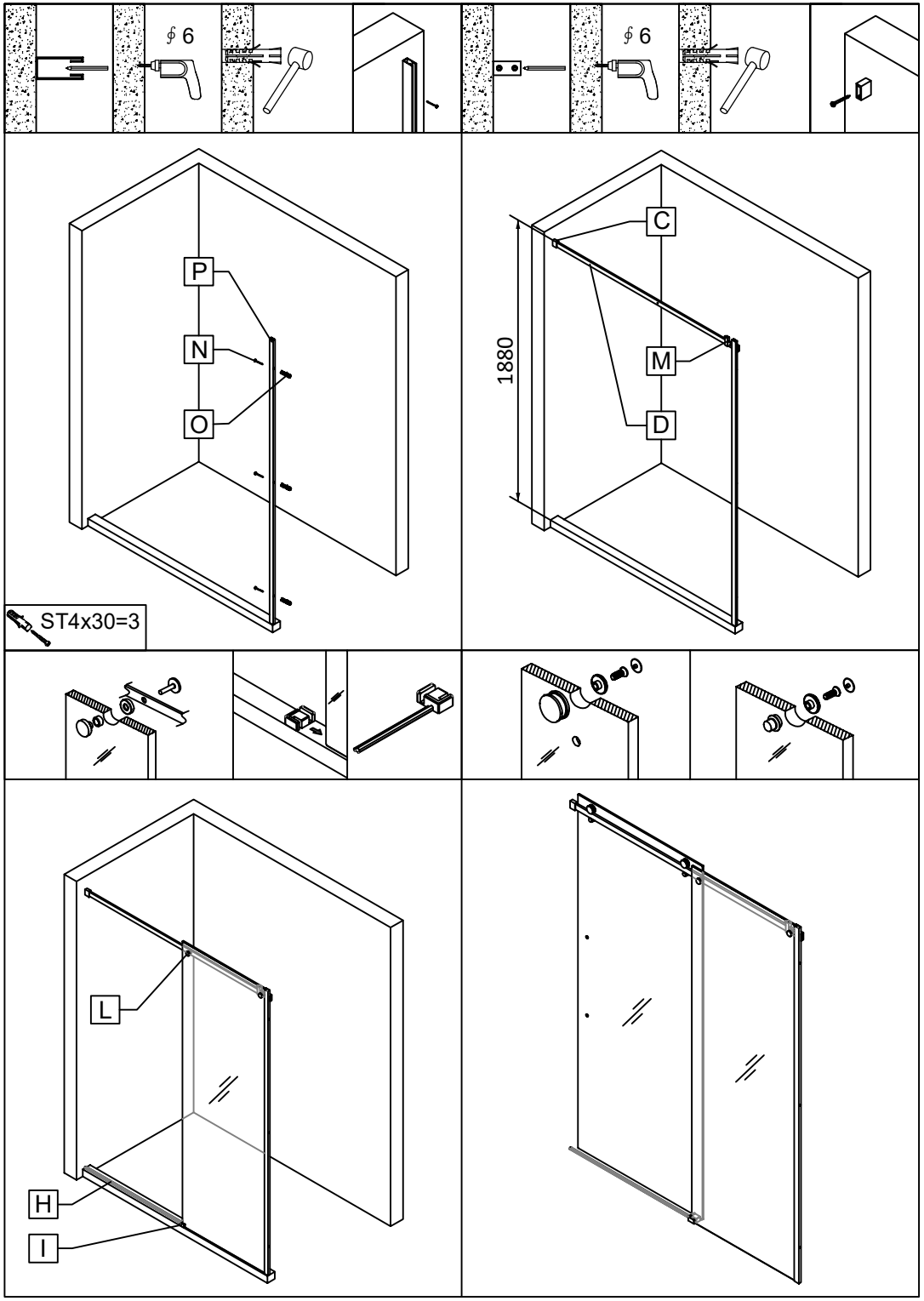
ϕ 6
ϕ 6
P
N
O
C
M
D
1880
ST4x30=3
L
H
I

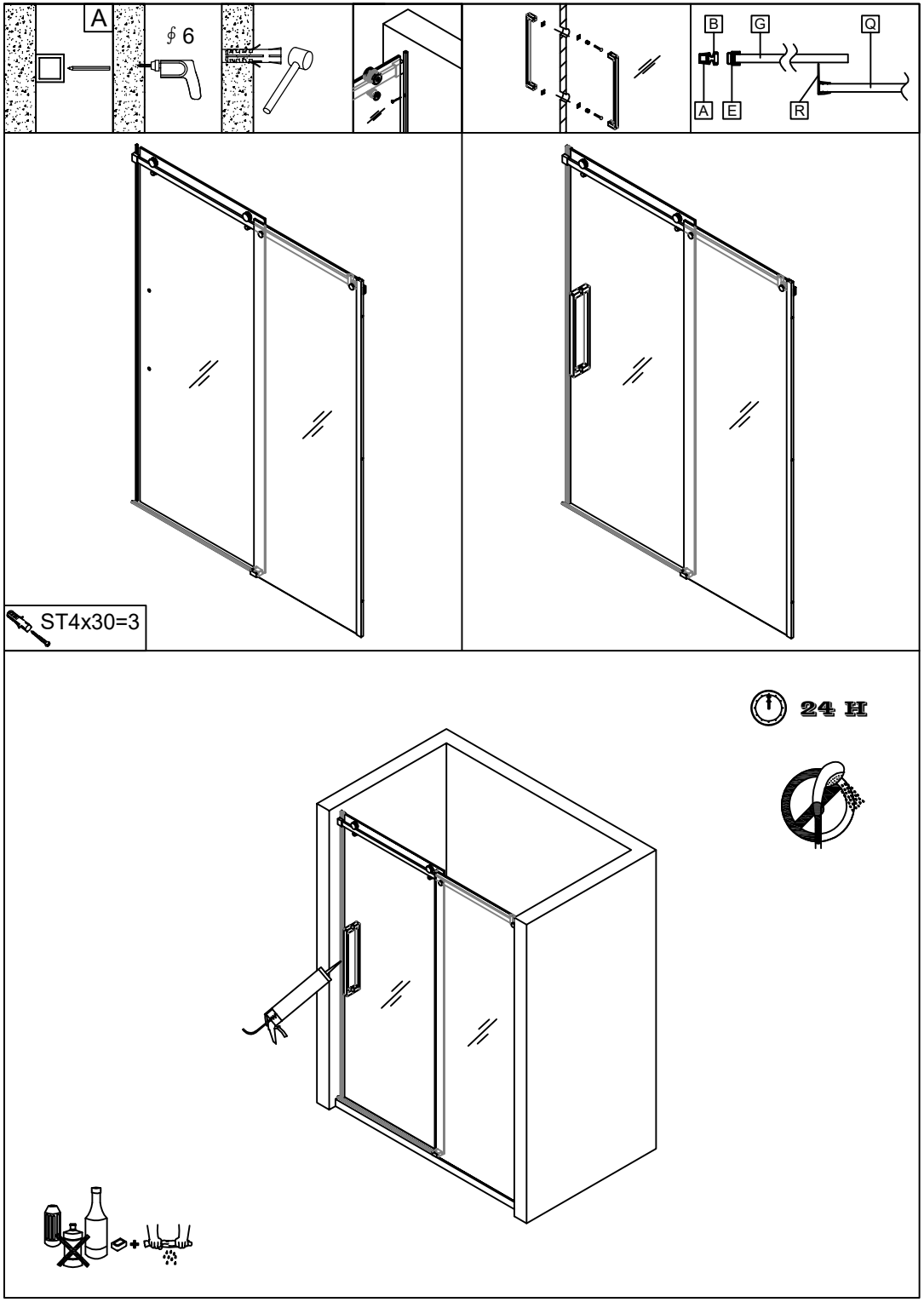
A
ϕ 6
B
G
Q
A
E
R
ST4x30=3
24 H